NB-IOT MODEM

VEGA NB-15

USER MANUAL

DOCUMENT REVISION	FIRMWARE VERSION
03	0.8

CONTENTS

INTRODUCTION 3
1 DEVICE PURPOSE AND OPERATION PRINCIPAL 4
Device Purpose 4
Operation Algorithm 4
Functional 5
Marking 5
2 SPECIFICATION 6
Device Specification 6
Default Device Settings 7
3 OPERATION 8
Device Appearance 8
Contacts 10
Buttons 12
Indication 13
Mounting Recomendations 14
4 COMMUNICATION PROTOCOL 17
Data Collection Mode 17
5 STORAGE AND TRANSPORTATION REQUIREMENTS 19
6 CONTENT OF THE PACKAGE 20
7 WARRANTY 21

INTRODUCTION

This manual is designated for Vega NB-15 modem (hereinafter – the modem) manufactured by Vega-Absolute OOO and provides information on powering and activation procedure, control commands and functions of the counter.

This manual is targeted at specialists familiar with installation work fundamentals of electronic and electrical equipment.

Vega-Absolute OOO reserves the right to make changes to the manual related to the improvement of equipment and software, as well as to eliminate typos and inaccuracies, without prior notice.

1 DEVICE PURPOSE AND OPERATION PRINCIPAL

DEVICE PURPOSE

Vega NB-15 modem is designed for the data collection from the external connected devices and transmitting it to the server by the NB-IoT technology.

In addition, Vega NB-15 can be used as a security device – two additional inputs operate in security mode.

The modem can be used for any utilities' meters and industrial equipment with RS-485 interface, with analog or digital outputs or for the periodic collection of temperature values from the 1-Wire sensors.

Vega NB-15 has an external NB-IoT antenna and ingress protection rating IP67.

Equipment with NAMUR pulse output is not supported

The modem is powered by one or two batteries with 6400 mAh capacity or by an external supply with power 5...55 V.

OPERATION ALGORITHM

The readings collecting from the meter with a configurable schedule. The readings stored in the device memory and transmitting during the next communication session with the NB-IoT network.

Data are transferred with a configurable schedule too. Data can be transferred in random point in time during set period or in the set time. At the next communication session, the device starts sending accumulated packets with readings, from the earliest to the latest.

The device operates with confirmation all the time and send the next packet only after receiving a confirmation of the delivery of the previous one. If such confirmation was not received, NB-15 completes the communication session until the next one according to the schedule. Herewith, the device continues to collect data according to the data collection period and store it in memory. Non-transmitted packets remain in the device memory until the next communication session.

The internal clock is set automatically when device connected to the "Vega NB-IoT Configurator" via USB.

FUNCTIONAL

Vega NB-15 modem has the following features:

- RS-485 interface through ModBus protocol;
- 1-Wire interface for connection of temperature sensors (up to 10);
- Two digital inputs which can also operate in security» mode for connecting the external leakage and safety sensors, etc;
- Two analog inputs;
- Queue for sending packages when delivery is not possible;
- Time referencing of readings by internal clock;
- Communication in case of security inputs actuation;
- Internal device temperature measurement by the built-in thermosensor;
- External voltage measuring.

MARKING

Device marked with sticker that contain the next information:

- Device model;
- IMEI;
- Month and year of manufacture.

Sticker located in three places – on device case, in factory certificate and on the packing box.

2 SPECIFICATION

DEVICE SPECIFICATION

MAIN	
Interfaces	RS-485 (ModBus) / 1-Wire
Analog inputs	2
Digital inputs	2
USB-port	micro-USB, type B
Operating temperatures	-40...+85 °C
Built-in temperature sensor	yes
Quantity of black box records	200
CELLULAR COMMUNICATIONS	
Supported Cellular Standards	LTE Cat NB1
Data transfer protocol	MQTT
LTE NB-IoT antenna type	external
POWER	
Battery	6400 / 12800 mAh
External power	5...55 V
CASE	
Housing dimensions	95 x 95 x 50 mm
Ingress protection rating	IP67
PACKAGE	
Dimensions	165 x 118 x 57 mm
Weight	0,350 kg

DEFAULT DEVICE SETTINGS

PARAMETER	VALUE
Confirmed Uplinks	OFF
Communication period	24 hours
Data collection period	24 hours
Time zone	UTC +00:00
Guard inputs operate	on short
Hall sensor	ON
Send network statistics	OFF

For changing the device settings, you need to connect to it with "Vega NB-IoT Configurator" application. You can download app on the iotvega.com site in SOFT section as well as User Manual for configurator. Go to the app page.

3 OPERATION

DEVICE APPEARANCE

Vega NB-15 is represented in gray plastic case which has six screws and mounting for DIN-rail. The device case is equipped with a hermetic gland of M12 size. A sealant is installed inside the gland, ensuring compliance with the declared Ingress Protection rating of the device case.

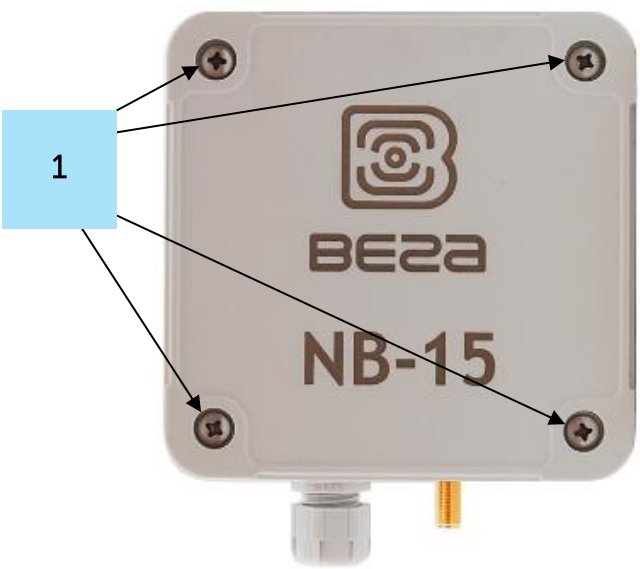

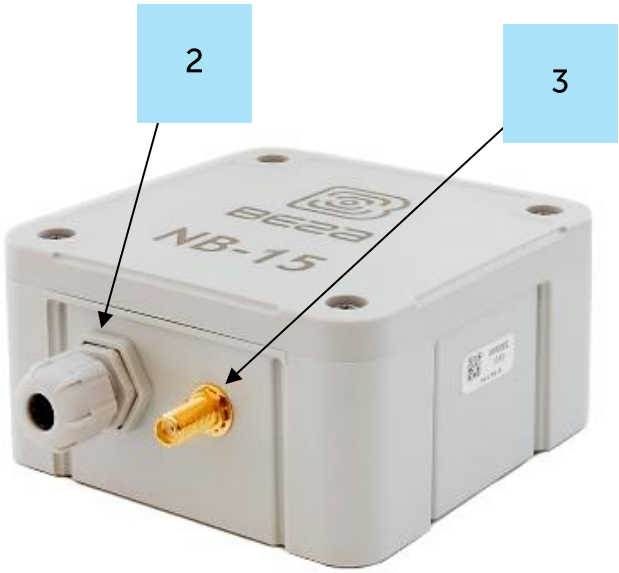

1 – screw ø 4 mm x 27 mm, cross ⊕

2 – cable gland of M12 size for installing the cables and wires with circular cross-section with a diameter of 5...6 mm

3 – input of external antenna

Internal structure of cable gland

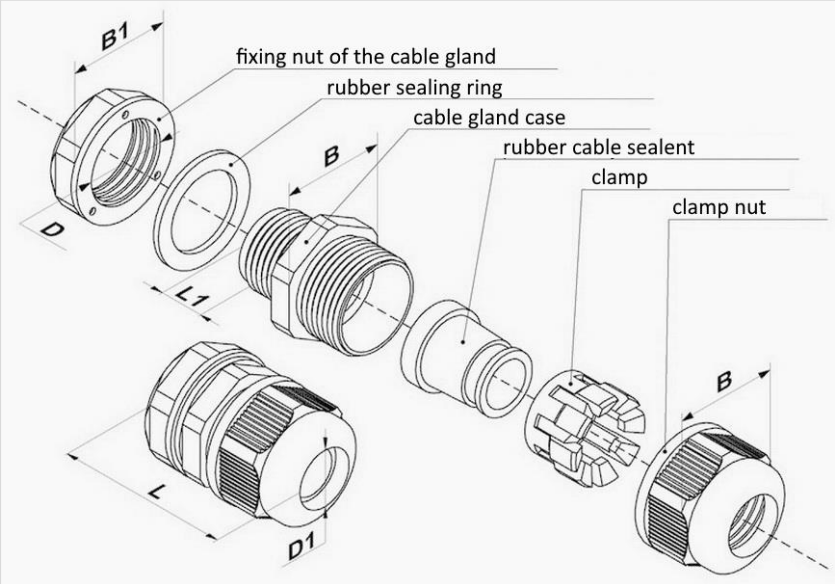

All of elements for manage and indication as well as connecting contacts are placed on the board inside the case.

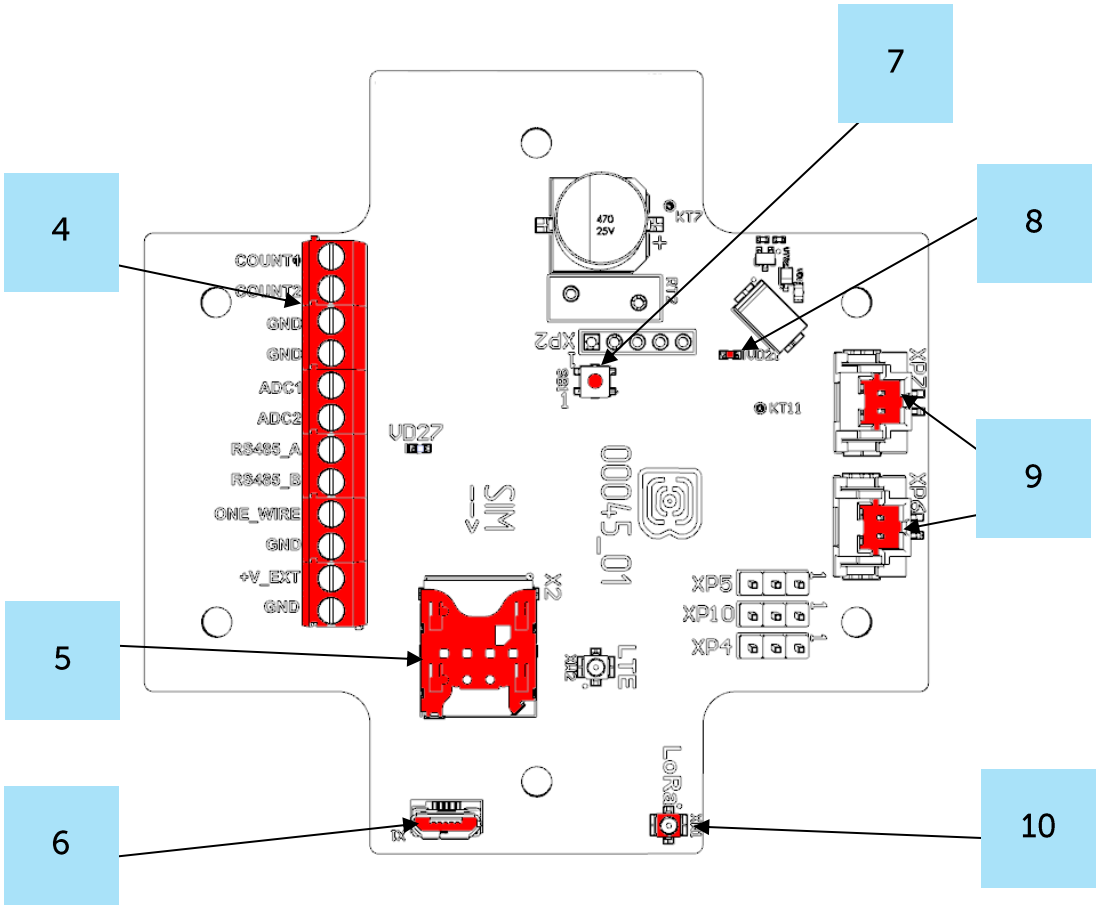

4 – contacts

5 – USB-port

6 – LED indicators

7 – SIM holder

8 – input for connecting a battery

9 – manage buttons

10 – input for connecting an external antenna

CONTACTS

When connecting a radio modem to external devices, consider the internal circuitry of its pulse inputs shown below.

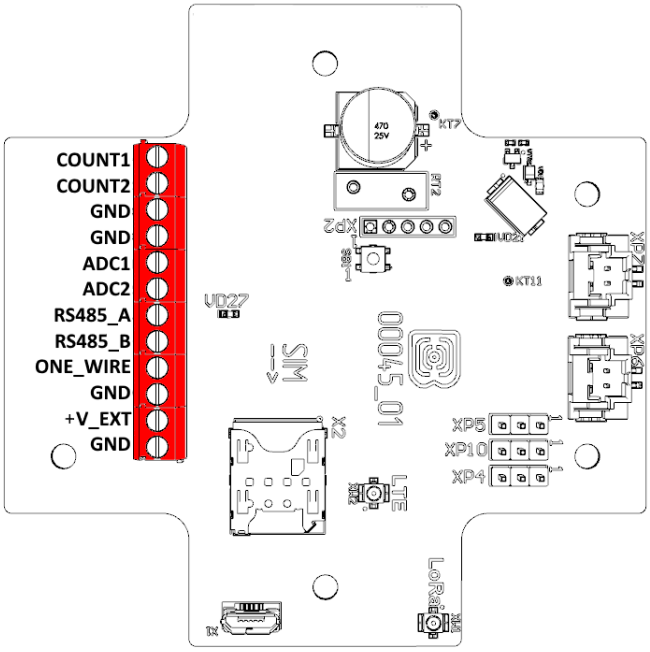

Circuit design of the pulse inputs

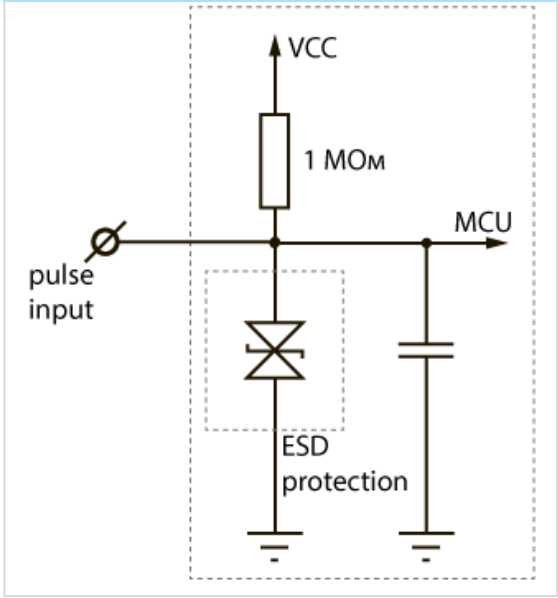

Contacts description is in the table below.

Contact	Name on the board	Description
1	COUNT1	Digital input 1
2	COUNT2	Digital input 2
3	GND	Ground
4	GND	Ground
5	ADC1	Analog input 1 (0...21 B)
6	ADC2	Analog input 2 (0...21 B)
7	RS485_A	RS-485 Interface A
8	RS485_B	RS-485 Interface B
9	ONE_WIRE	1-Wire Interface
10	GND	Ground
11	+V_EXT	External power +
12	GND	External power -

Digital inputs COUNT1 and COUNT2 may operate in pulse or security mode. If the input has not connected there is a logic '1'.

In the pulse mode the modem counts the number of pulses at the input. Fixation is by the impulse slump. In the security mode the modem monitors the input state change and send an alarm message into the network by the one of events: security circuit close, unclose or both

of it. You can choose the event for security input triggering via the “Vega NB-IoT Configurator” application.

Analog inputs ADC1 and ADC2 may be used for measuring an external voltage from 0 to 21 V.

RS-485 (Modbus) and 1-Wire interfaces cannot be connected at the same time. Switching between two interfaces carried out with jumpers on the XP4 and XP5 connectors on the board.

1-Wire interface allows to connect is up to 10 external thermistors (see part 4).

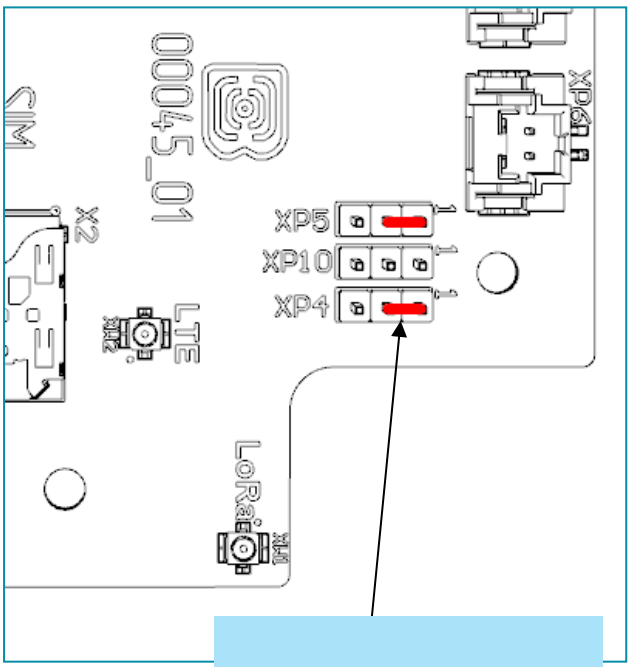

Jumpers disposition for

RS-485 interface operating

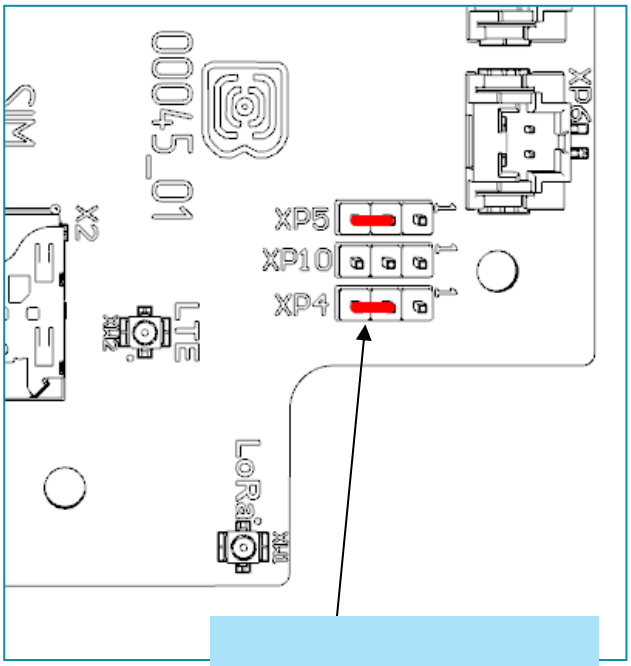

Jumpers disposition for

1-Wire interface operating

BUTTONS

There is a button on the board which described in the table below.

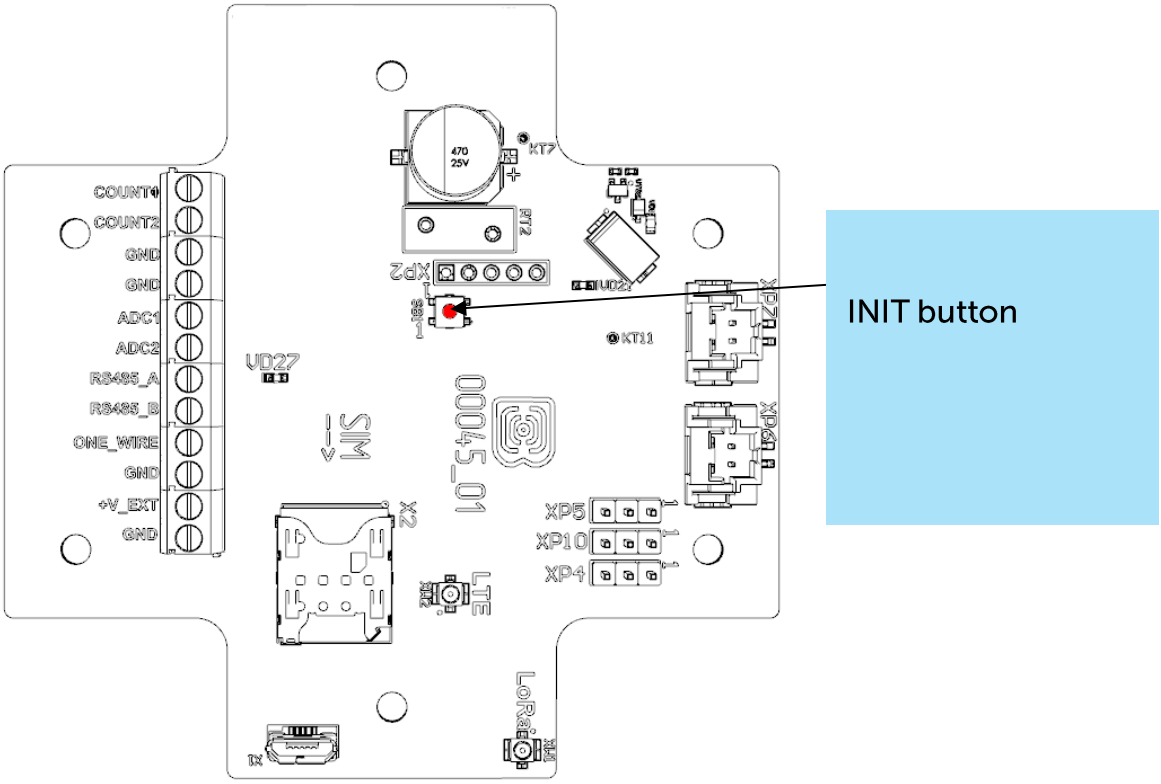

INIT	
Pressing for 1 second	Registration at the network
Pressing for 2 seconds	Data transmitting
Pressing for 3 seconds	LTE-modem switching off
Pressing for 3 seconds	Packet generation
Short pressing	Device reset

When you hold down the button, the red LED starts flashing once a second, which will help you to find out the duration of pressing. Pressing for 1 second corresponds to one flash of the LED, pressing for 2 seconds corresponds to two and so on.

INDICATION

There is a red LED on the board. LED shows the device state.

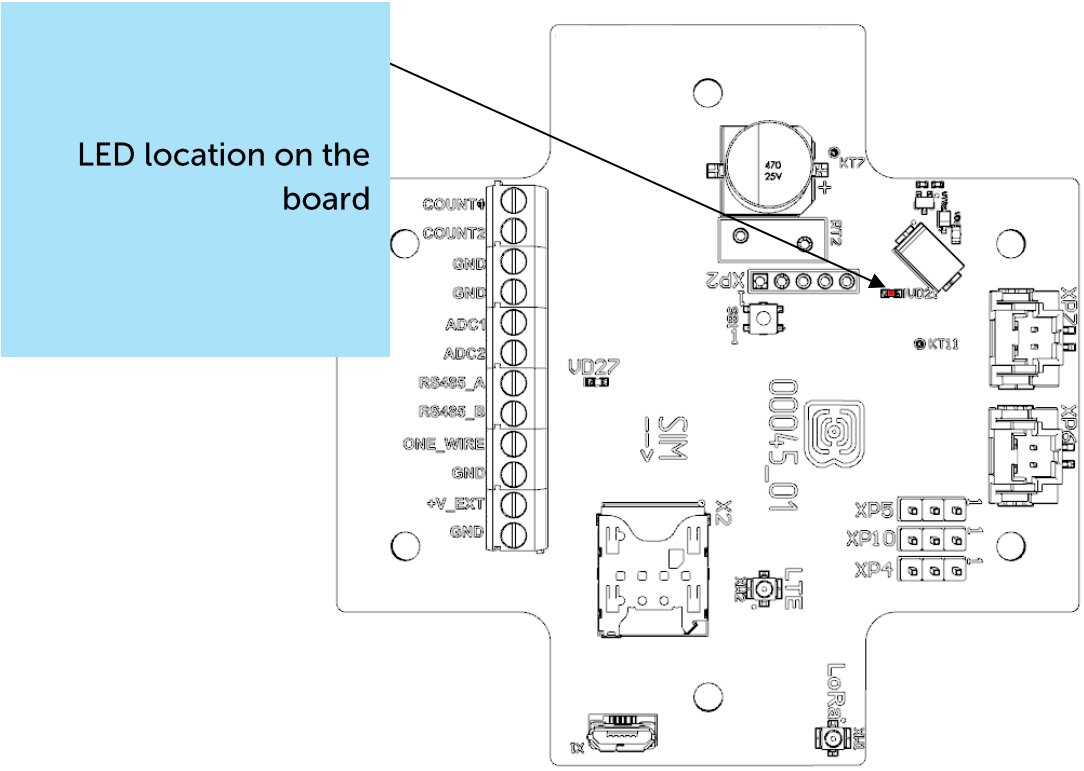

LED signal		Meaning
	Short flash every three seconds	Device searches the network
	Short flash every second	Device successfully connected to the network
	Two short flashes every second	Device transmits data to the network
	Short flash every five seconds	Device in the “Operation” mode
	No light	Device in the “Sleep” mode or switched off

MOUNTING RECOMENDATIONS

The counter shall be installed and adjusted by qualified specialists to ensure proper operation of the device.

When connecting the pulse output of the metering device to the counting input of the modem, it is recommended to use cables with a shielding braid, and to install the metering device with the modem away from sources of radio interference. It is recommended to use a two-wire shielded cable. The shield is connected on the side of the impulse counter to its ground.

1st wire – signal from pulse output is connecting to contact COUNT

2nd wire – ground is connecting to contact GND

Shield – is connecting to contact GND

Before starting mounting work, you must make sure that the latest firmware version is installed on the equipment

For mounting you will need:

- SIM-card;
- cross-shaped screwdriver ⊕;
- wire stripper;
- laptop.

Step by step mounting be like:

1. Installing SIM-card into holder;
2. Setting the device through the "Vega NB-IoT Configurator" – the first and second steps are usually carried out in the office.
3. De-energizing the connected equipment, metering devices, etc.
4. Placement the wires in the cable gland. It must be remembered that the wires must be united in one cable of circular cross-section with diameter of 5...6 mm.

Inside the cable gland there is a sealant ensuring compliance with the declared Ingress Protection rating of the device case. When removing the sealant, as well as when installing wires of a different diameter or cross-section, device performance may deteriorate until failure due to moisture entering the case

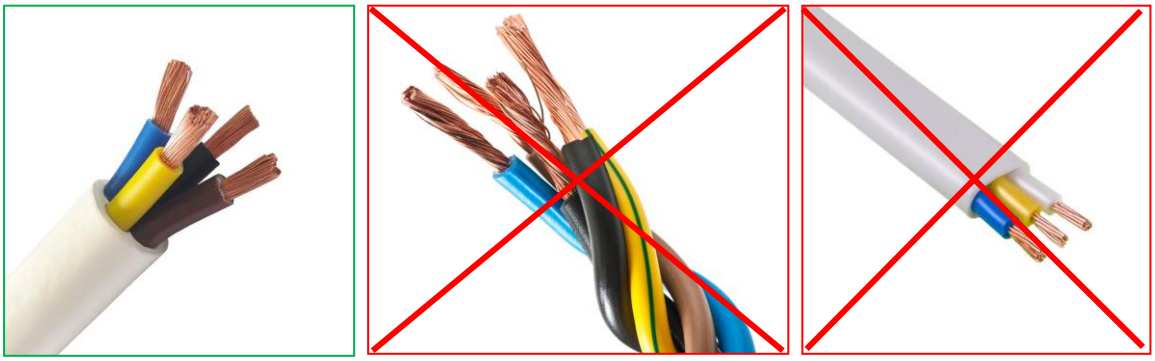

5. Connecting all necessary wires to the contacts.
6. Connecting the battery at the connector. After the battery connection the device loads and comes to sleep until the next communication session.

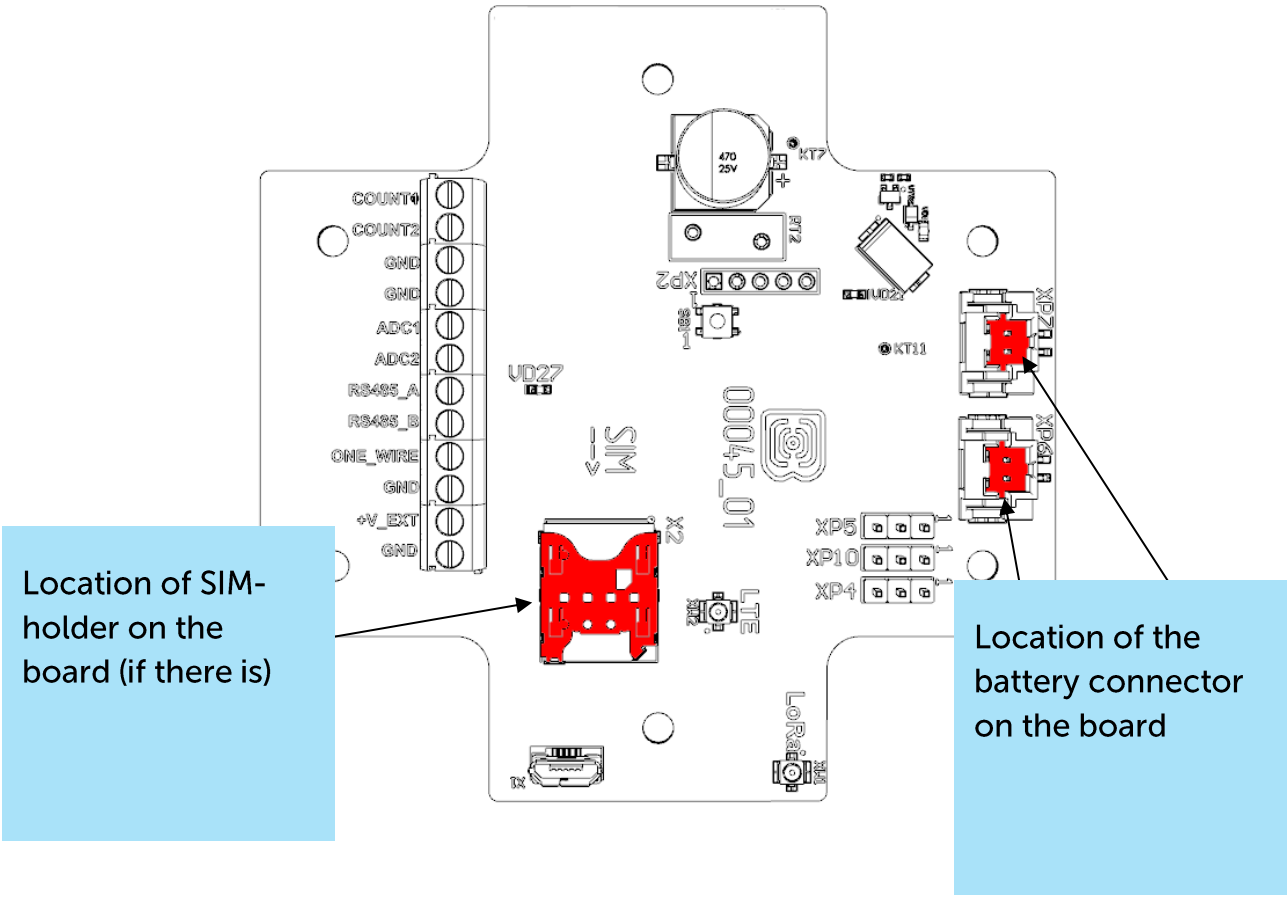

7. If you need to test the data transmitting, then press and hold the INIT button for the 2 seconds.
8. Before assembling the device, you can reset the pulses accumulated during testing and connection through the “Vega NB-IoT Configurator” if it is necessary.
9. Assembling the device.

Firstly, it is necessary to install SIM into slot on the board and set up the data transmitting with "Vega NB-IoT Configurator" (See part 4).

Vega NB-15 modem can be powered from either an external power source or built-in battery. To operate from the built-in battery, you must connect the battery connector to the one of power connectors on the board which XP7 or XP6 marked. In case of operation with two batteries you should use both connectors.

After power supplying the device loading and sleeps until the communication session according with the schedule.

If you need to test the data transmitting, then press and hold the INIT button for the 2 seconds.

4 COMMUNICATION PROTOCOL

DATA COLLECTION MODE

Data transmits via MQTT protocol. You should specify in the device settings the address and port of the server where the data will be sent. Those settings specified in application "Vega NB-IoT Configurator". It must be MQTT broker as a server (received side). You should specify in the device settings the address and port of the broker. Also, you should specify a topic name where the data published and a client name – the name which the device use for publishing. All those settings specified in "Vega NB-IoT Configurator" in part "MQTT settings". For watching the data sending by the device you should deploy MQTT broker on a PC and subscribe some application on MQTT broker.

Vega NB-15 sends the message on the server as a text of JSON format. See example below.


```
{
 "Message": {
  "dev": "NB-15 v0.8",
  "IMEI": "867723030685126",
  "IMSI": "250990283645008",
  "ICCID": "8970199171166671608",
  "num": 5,
  "UTC": 1618557030
 },
 "CellStatus": {
  "SQ": 27,
  "EARFCN": 1266,
  "PCID": 475,
  "RSRP": -653,
  "RSRQ": -108,
  "RSSI": -593,
  "SNR": 199
 },
 "Telemetry": {
  "reason": "cnfg",
  "UTC": 1618557000,
  "bat": 99,
  "pulse1": 0,
  "pulse2": 0,
  "ADC1": 8,
  "ADC2": 8,
  "temp": 26,
  "s_alarm1": 1,
  "s_alarm2": 1,
  "onewire": [
   26.7
```

```
    ]
  }
}
```


Transcription of the message fields:

Message – part with information about current message.

dev – name and version of the device firmware
IMEI – LTE-modem identifier
IMSI, ICCID – SIM-card (SIM-chip) identifiers
num – the number of the message
UTC – the date and the time of message sending in UTC format by Greenwich

CellStatus – part with information about the cellular state (this part displayed only if you check the corresponding function in the configurator)

SQ – gateway signal quality
EARFCN – the number of radio frequency channel (absolute)
PCID – physical network address
RSRP – input signal power (in santibells[1])
RSRQ – input signal quality (in santibells[1])
RSSI – indicator of the input signal power (in santibells[1])
SNR – signal to noise ratio

Telemetry – part with collected data (one packet)

reason – reason for packet forming*
UTC – the date and the time of message collecting in UTC format by Greenwich
bat – battery charge
pulse1 – pulse number on the input 1
pulse2 – pulse number on the input 2
ADC1 – voltage value on the analog input 1
ADC2 – voltage value on the analog input 2
temp – processor temperature
s_alarm1 – state of ALARM1 input at the time of data slice ("0" - logic zero input, "1" - logic one input)
s_alarm2 – state of ALARM2 input at the time of data slice ("0" - logic zero input, "1" - logic one input)
onewire – values of temperatures of sensors on 1-Wire bus

[1] Decibels multiplied by 10

5 STORAGE AND TRANSPORTATION REQUIREMENTS

Vega NB-15 modem shall be stored in the original packaging in heated room at temperatures +5 °C to +40 °C and relative humidity less than 85%.

The modem shall be transported in covered freight compartments of all types at any distance at temperatures -40 °C to +85 °C.

6 CONTENT OF THE PACKAGE

The modem is delivered complete with:

Vega NB-15 modem – 1 pc.

Antenna – 1 pc.

Factory certificate – 1 pc.

7 WARRANTY

The manufacturer guarantees that the product complies with the current technical documentation, subject to the storage, transportation and operation conditions specified in the "User Manual".

The warranty period is 36 months.

The warranty period of operation is calculated from the date of sale marked in the product factory certificate, and from the release date when such a mark is absent. During the warranty period, the manufacturer is obliged to provide repair services or replace a failed device or its components.

The manufacturer does not bear warranty obligations in the event of a product failure if:

- the product does not have a factory certificate;
- the factory certificate does not have an TCD stamp and / or there is no sticker with information about the device;
- the serial number (DevEUI, EMEI) printed on the product differs from the serial number (DevEUI, EMEI) specified in the factory certificate;
- the product has been subject to alterations in the design and / or software which are not provided for in the operational documentation;
- the product has mechanical, electrical and / or other damage and defects arising from violation of the conditions of transportation, storage and operation;
- the product has traces of repair outside the manufacturer's service center;
- the components of the product have internal damage caused by the ingress of foreign objects / liquids and / or natural disasters (flood, fire, etc.).

The average service life of the product is 7 years.

In the event of a warranty claim, contact the service center:

119A, Bol'shevistskaya Str., Novosibirsk, 630009, Russia.

Tel.: +7 (383) 206-41-35.

e-mail: remont@vega-absolute.ru

Document Information	
Title	NB-IoT modem Vega NB-15
Document type	Manual – Translation from Russian
Document number	V02-NB15-01
Revision and date	03 of 24 January 2022

Revision History

Revision	Date	Name	Comments
01	22.01.2020	KEV	The first release
02	28.04.2021	KEV	JSON message content has been changed, new communication periods: 2, 3 and 4 hours
03	24.01.2022	KMA	Planned revision

vega-absolute.ru

User Manual © Vega-Absolute OOO 2020-2022